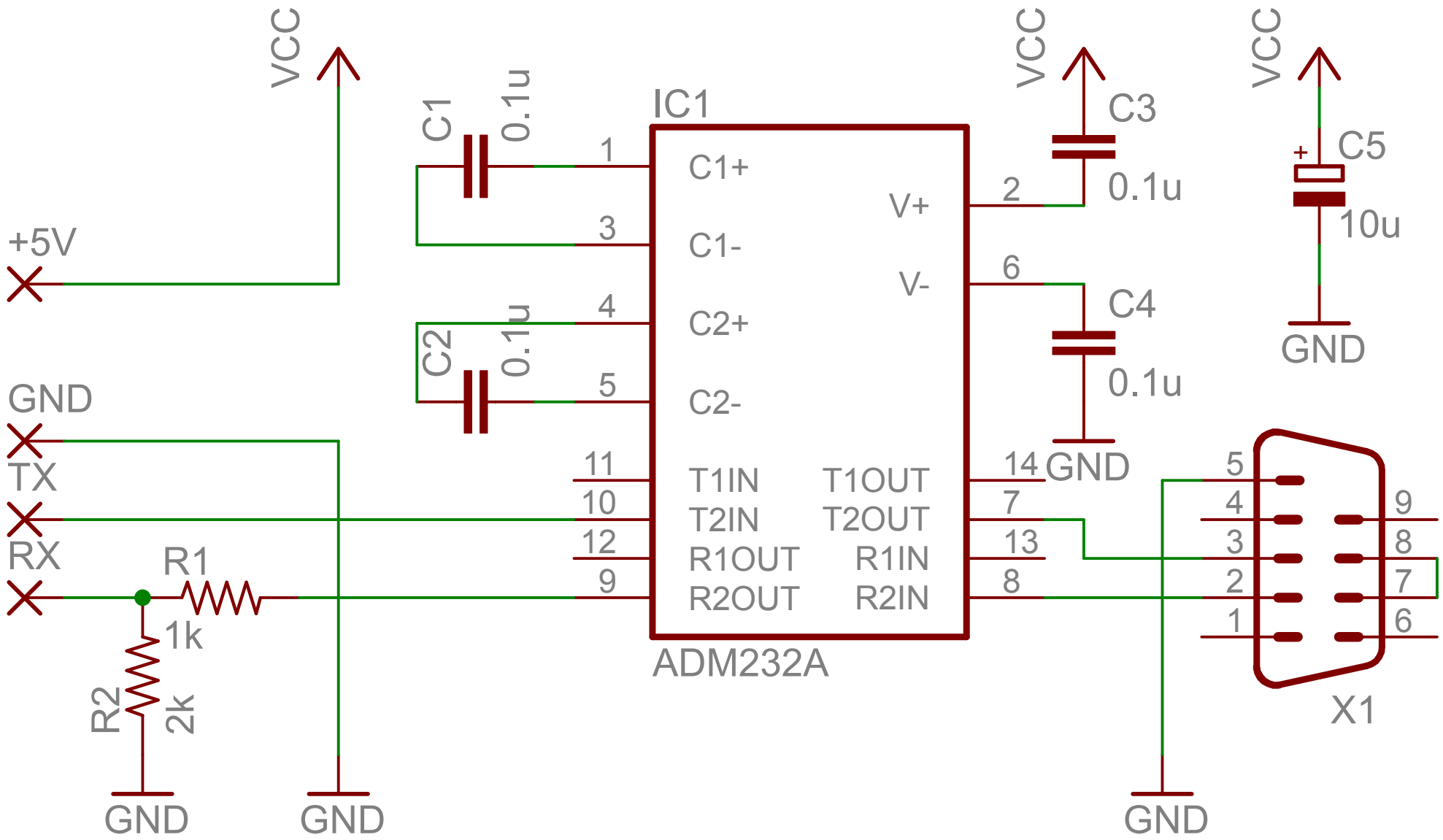
VCC
+5V
C1
0.1u
C2
0.1u
IC1
1
3
4
5
C1+
C1-
C2+
C2-
V+
V-
2
6
VCC
C3
0.1u
C4
0.1u
GND
VCC
C5
10u
GND
GND
TX
RX
11
10
12
9
T1IN
T2IN
R1OUT
R2OUT
T1OUT
T2OUT
R1IN
R2IN
14
7
13
8
R1
1k
R2
2k
GND
GND
GND
5
4
3
2
1
9
8
7
6
X1
ADM232A