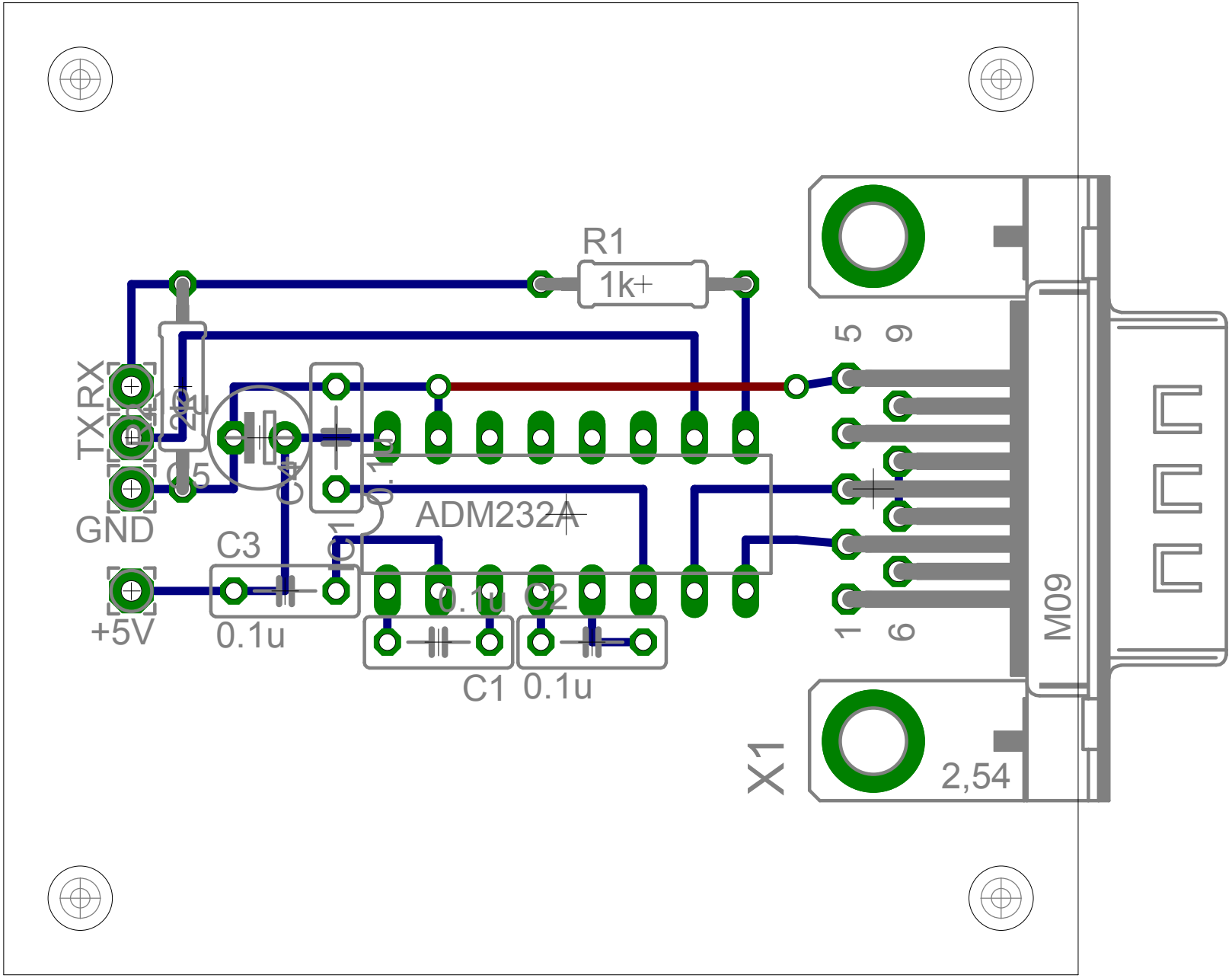
R1
1k
TX
RX
GND
+5V
C5
C4
C3
0.1u
C1
0.1u
C2
0.1u
ADM232A
5
9
1
6
M09
X1
2,54