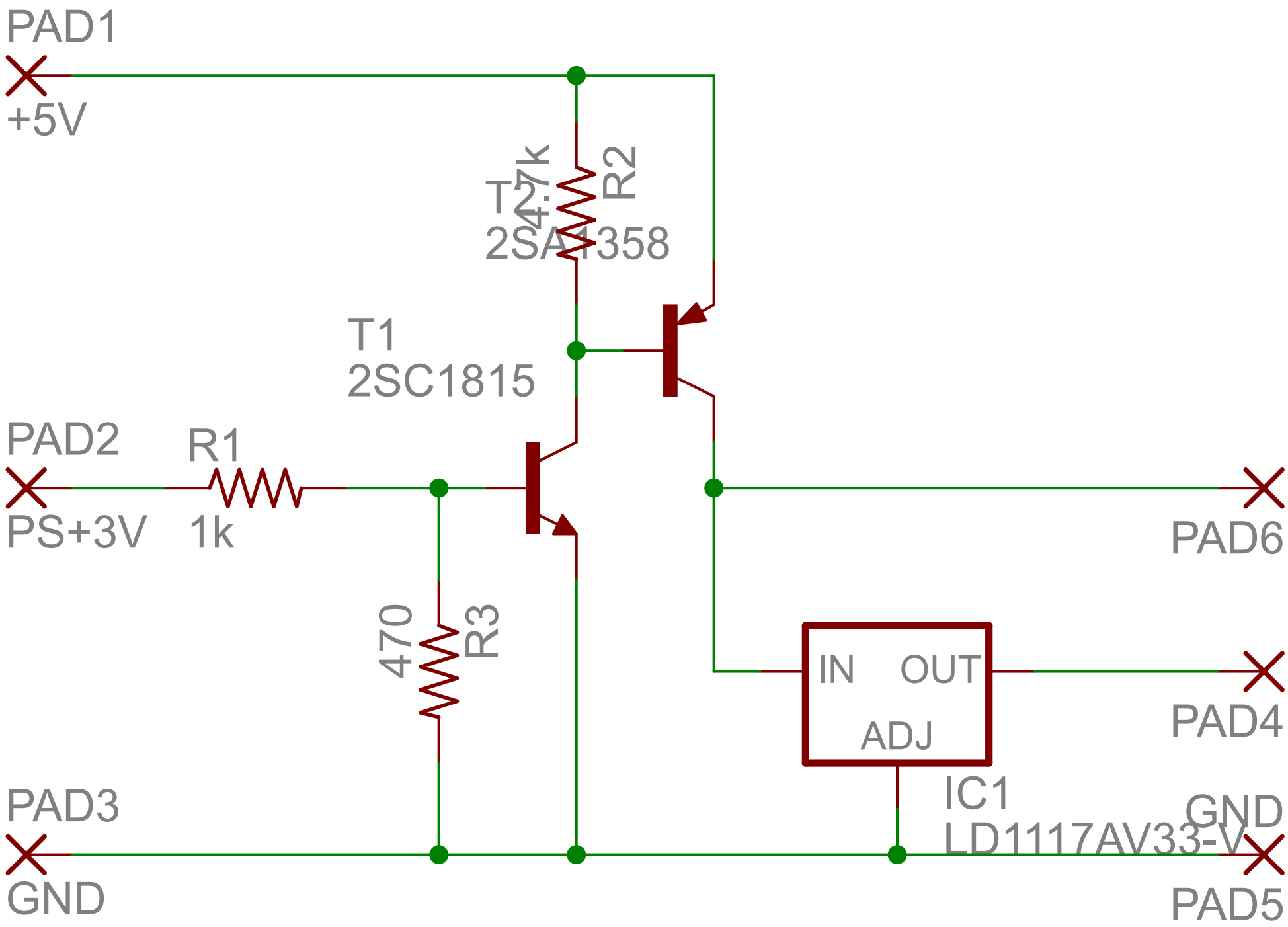
PAD1
+5V
4.7k
R2
T2
2SA1358
T1
2SC1815
PAD2
R1
PS+3V
1k
470
R3
PAD6
IN
OUT
ADJ
PAD4
IC1
LD1117AV33-V
GND
PAD3
GND
PAD5