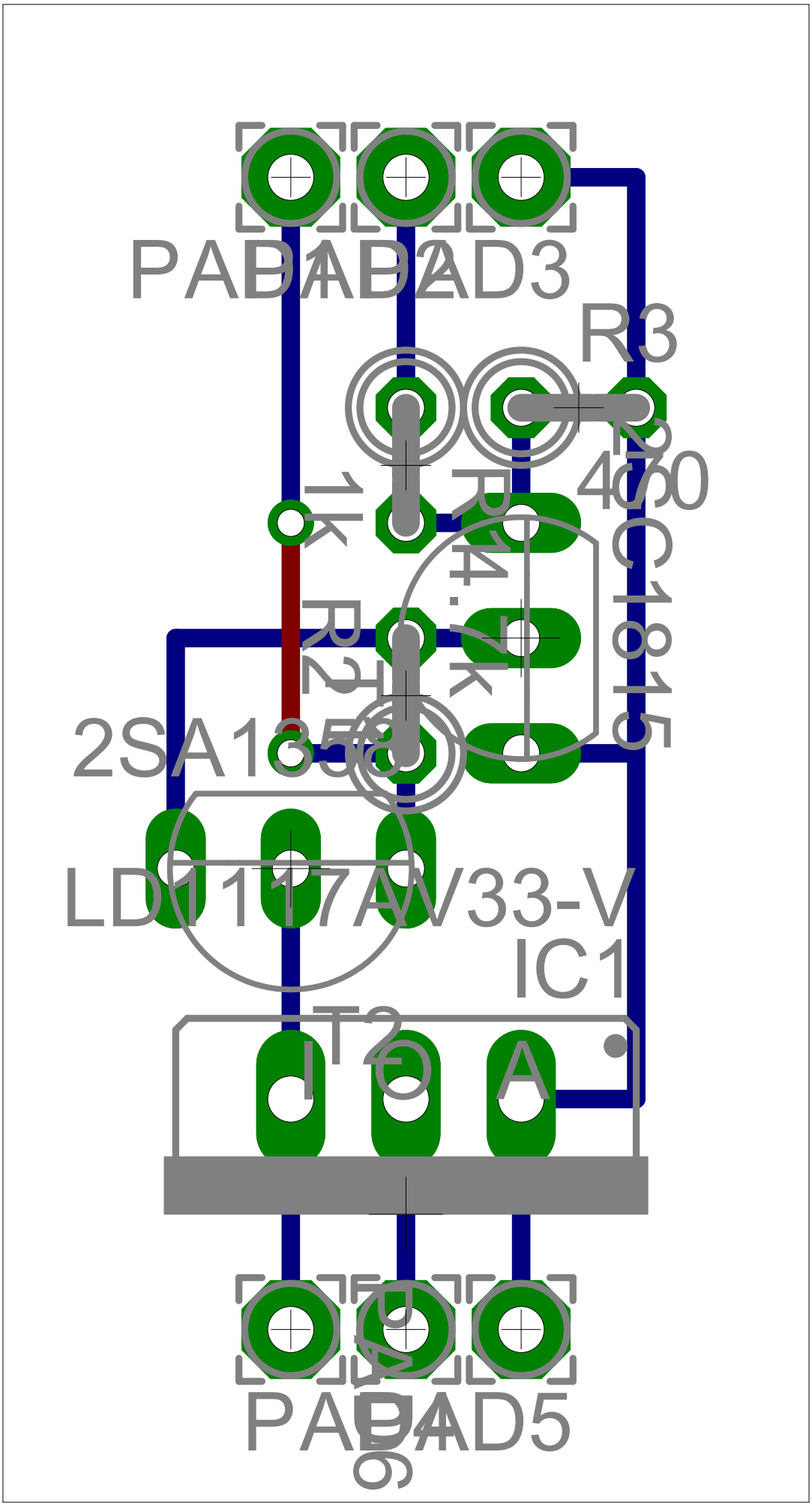
PAD1
PAD2
PAD3
R3
4k0
R4
4k
R2
1k
2SA1358
2SC1815
LD1117AV33-V
IC1
T2
PAD4
PAD5