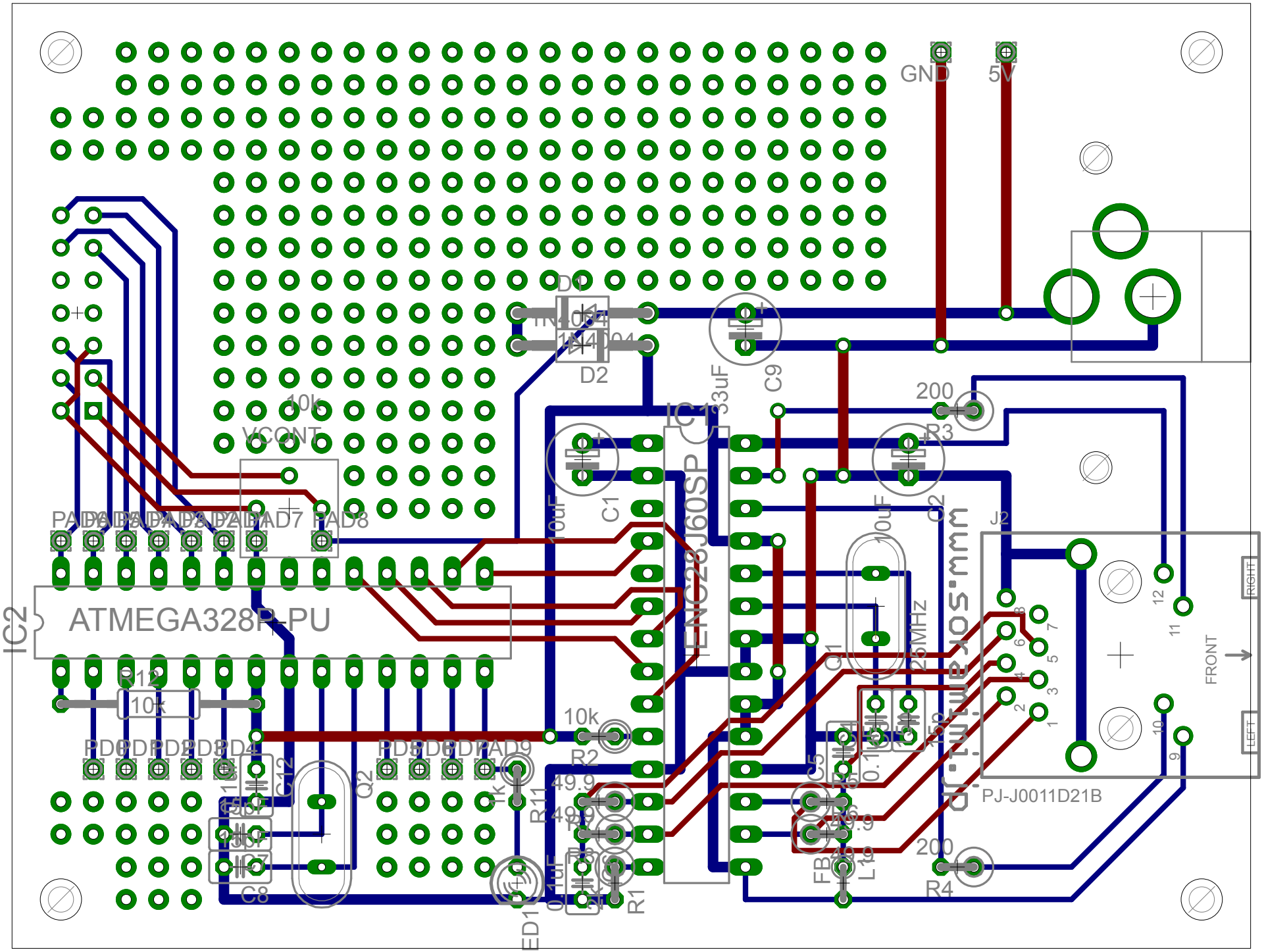
GND
5V
D1
1N4004
D2
C9
33uF
200
R3
10k
VCONT
C1
10uF
IC1
ENC28J60SP
C2
10uF
J2
PAD7
PAD8
IC2
ATMEGA328P-PU
R12
10k
10k
R2
PD0
PD1
PD2
PD3
PD4
PD5
PD6
PD7
PAD9
C12
Q2
R11
49.9
49.9
C8
LED1
R1
Q1
25MHz
C5
FB
L1
200
R4
PJ-J0011D21B
FRONT
RIGHT
LEFT