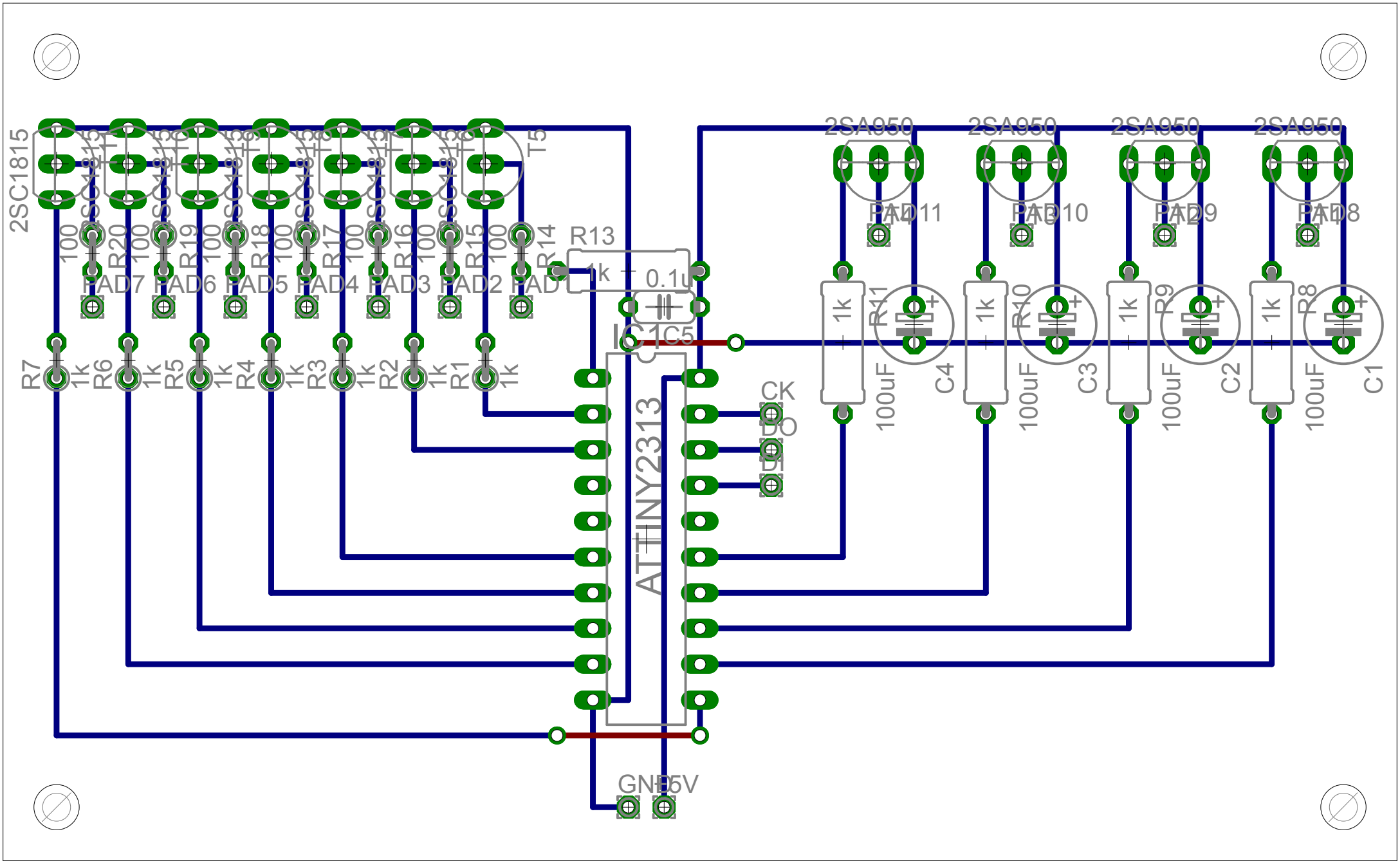
2SC1815
T5
R13
1k
0.1u
C5
IC1
ATTINY2313
CK
DO
DI
GND
5V
2SA950
2SA950
2SA950
2SA950
PAD11
PAD10
PAD9
PAD8
PAD7
PAD6
PAD5
PAD4
PAD3
PAD2
PAD1
R7
R6
R5
R4
R3
R2
R1
R20
R19
R18
R17
R16
R15
R14
R11
R10
R9
R8
C4
C3
C2
C1
100uF
1k
100