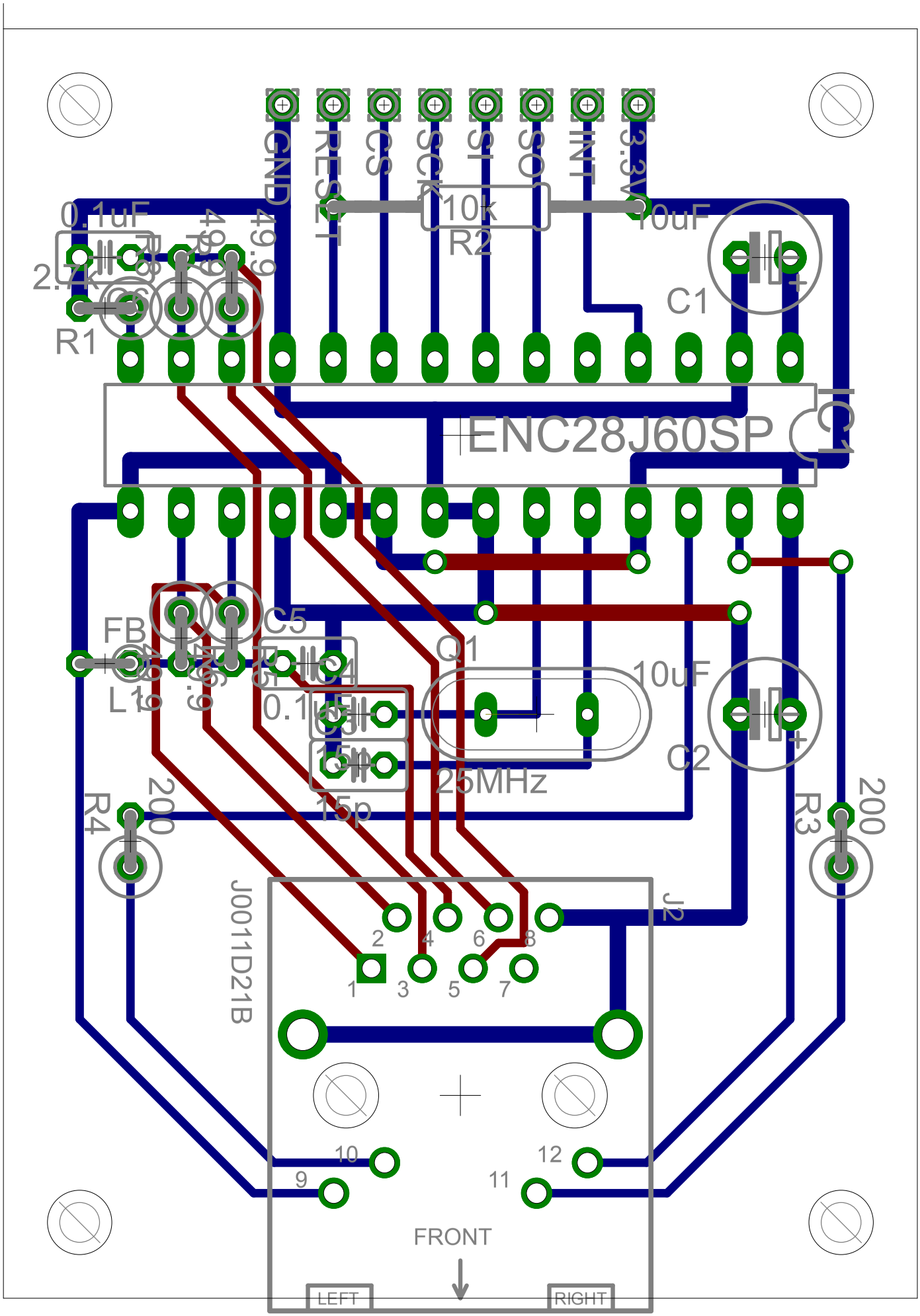
GND
RESET
CS
SCK
SI
SO
INT
3.3V
10k
R2
10uF
C1
0.1uF
2.7k
R1
49.9
ENC28J60SP
IC1
FB
L1
C5
0.1uF
Q1
10uF
C2
25MHz
15p
200
R4
200
R3
J0011D21B
J2
1
2
3
4
5
6
7
8
9
10
11
12
FRONT
LEFT
RIGHT